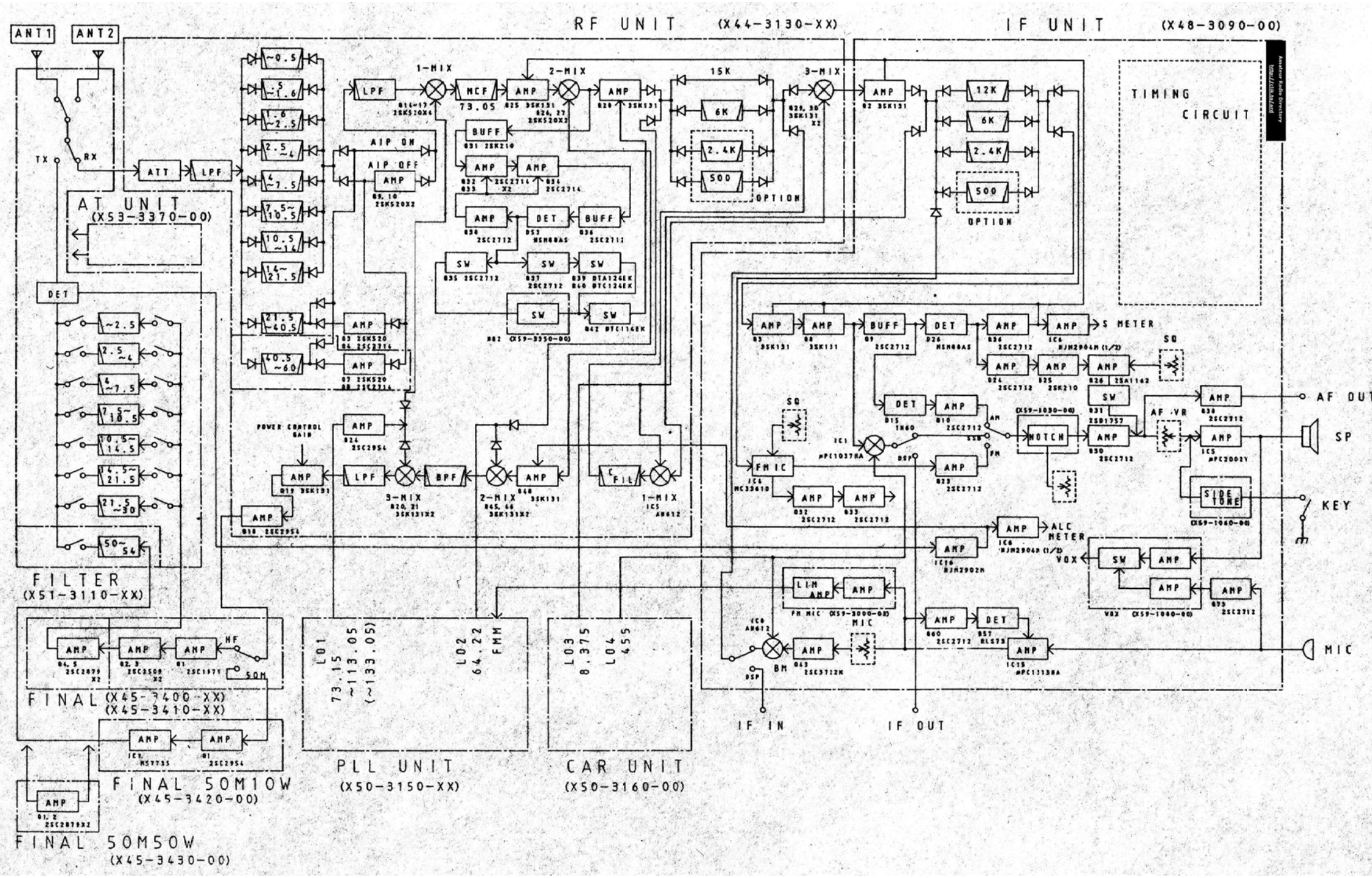

RF UNIT (X44-3130-XX)
IF UNIT (X48-3090-00)
ANT1
ANT2
TX
RX
ATT
LPF
AT UNIT (X53-3370-00)
DET
FILTER (X51-3110-XX)
AIP ON
AIP OFF
1-MIX
2-MIX
3-MIX
MCF
73.05
BUFF
DET
SW
15K
6K
2.4K
500
OPTION
12K
TIMING CIRCUIT
S METER
SQ
AF OUT
SP
KEY
MIC
NOTCH
AF VR
SIDE TONE
FM IC
ALC METER
VOX
LIM AMP
MIC
BM
POWER CONTROL GAIN
BPF
C FIL
FINAL (X45-3400-XX) (X45-3410-XX)
HF
50M
FINAL 50M10W (X45-3420-00)
FINAL 50M50W (X45-3430-00)
LO1 73.15 ~113.05 (~133.05)
LO2 64.22 FMM
PLL UNIT (X50-3150-XX)
LO3 8.375
LO4 455
CAR UNIT (X50-3160-00)
IF IN
IF OUT